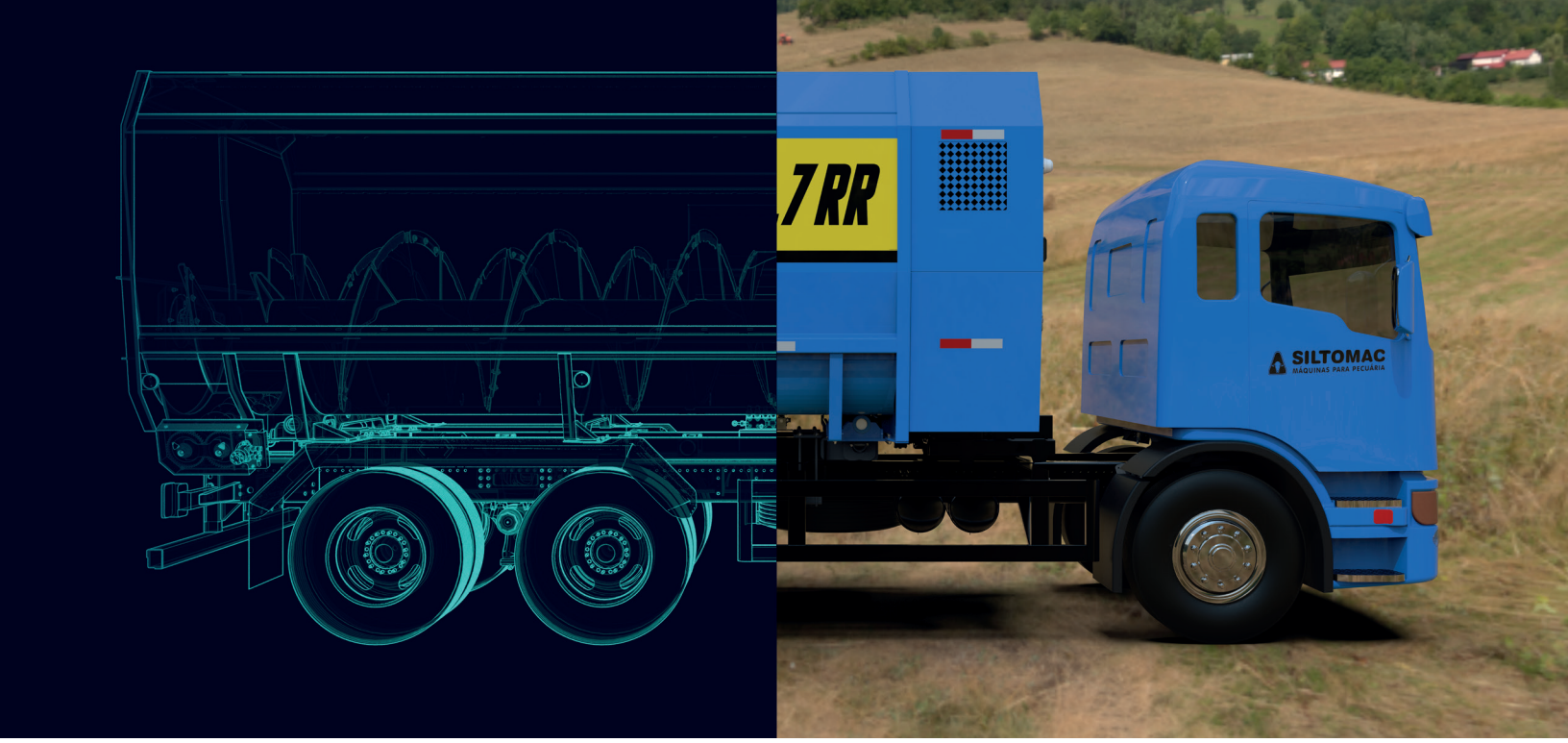

DIGITAL INDUSTRIES SOFTWARE

What's new in Designcenter Solid Edge 2026

Performance meets flexibility, powered by AI

Benefits

- Work smarter with AI tools like Magnetic Snap Assembly, Automatic Drawing creation and the in-app Copilot in Designcenter X Solid Edge.
- Explore large assemblies in immersive, first-person view with the new Walkthrough command.
- Accelerate sheet metal and part modeling with tab-and-slot automation, fill patterns and integrated wall thickness controls.
- Save time in drafting with automated 2D drawing generation, enhanced hole tables and 3D PDF section views.

Summary

Designcenter Solid Edge® 2026 delivers next-generation design productivity with powerful AI tools, immersive visualization and flexible cloud solutions to help you work smarter and faster. Highlights include AI-driven commands like Magnetic Snap Assembly, Automatic Drawing creation and the in-app Copilot in Designcenter X Solid Edge, plus immersive design review with the new Walkthrough command.

Enhanced sheet metal, drafting and part modeling features streamline manufacturing workflows and improve precision. With expanded value-based licensing options and seamless data interoperability, Designcenter Solid Edge 2026 gives you the freedom to scale capabilities, collaborate globally and design at the pace of innovation.

SIEMENS

siemens.com/solidedge

Benefits *continued*

- Customize your design environment with cloud-saved settings, Dark Theme and streamlined command bars.
- Expand design power on demand with value-based licensing for simulation, generative design, electrical routing and more.
- Collaborate globally with browser-based NX X Essentials and shared Parasolid compatibility for seamless workflows.
- Reuse and migrate legacy or third-party CAD data effortlessly to keep designs intelligent, compatible and ready for innovation.

Design smarter and faster with Designcenter X Solid Edge

Designcenter X Solid Edge delivers the full power of Designcenter Solid Edge in a secure, SaaS environment. Install anywhere, enjoy automatic updates and manage CAD with no extra IT overhead. Built-in cloud data management powered by Teamcenter X keeps designs organized, accessible and secure – with revision control, check-in/check-out and release workflows included. Teams can visualize, mark up and discuss designs in real time. Plus, powerful AI features – everything from Magnetic Snap Assembly to the in-app Design Copilot – help you stay focused and productive.

Work smarter, not harder, with AI that understands and improves how you work

Solid Edge 2026 puts Artificial Intelligence (AI) to work where you need it most – saving you time, clicks – keeping your designs moving forward. Snap together assemblies in seconds with Magnetic Snap Assembly, which automatically detects the right constraints so you don't have to. Let the new Automatic Drawing tool automate drawing creation so you can spend more time designing and less time documenting. And when you need help, the AI-powered Design Copilot in Designcenter X Solid Edge can offer real-time answers, tips and guidance to keep you moving forward – no interruptions, no guesswork.

Design clearly and confidently at any scale

Managing complex assemblies just got easier. Create multiple display configurations without duplicating files, so you can quickly switch views for design reviews or documentation. Enhanced part copy tools make it simple to reuse geometry with precision, while new explode view options help break down assemblies for better communication and planning. These upgrades give you greater flexibility and control – helping you work faster and more effectively from concept to completion.

Fabricate smarter sheet metal and design better parts

From modeling precision parts to preparing sheet metal for manufacturing, new enhancements help you design with speed and confidence. Create interlocking joints in seconds using tab-and-slot automation. Quickly generate thin-walled features with integrated wall thickness controls across major modeling commands. Expanded etching support and smarter flange trimming simplify detailing and improve manufacturability. And with the new Fill Pattern tool, you can apply repeating features to surfaces effortlessly – whether you’re simulating textures or reducing weight.

Step inside your design for a whole new perspective

With the new Walkthrough command, you can navigate assemblies like you’re really there – using your keyboard, mouse or even an Xbox® controller. Explore large models from a first-person view, capture flythrough paths and reuse them in animations or stakeholder presentations. Whether you’re reviewing complex layouts or showcasing your work, Walkthrough turns every design review into an immersive, interactive experience – no extra tools required.

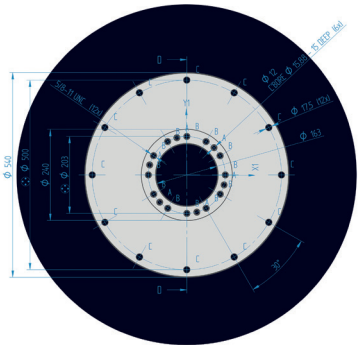

Capture every detail – clearly, quickly and accurately

Drafting and detailing are faster and more reliable than ever. Automatically generate 2D drawings with AI-powered tools that streamline setup and reduce rework. Add mid-plane reference planes with a single click, track revisions directly in your drawings and use custom symbols to standardize communication across teams. New enhancements also bring more precision to hole tables, support decals in shaded views and allow you to include section views in 3D PDFs – ensuring everyone, from the shop floor to the supply chain, can see exactly what they need.

Customize your experience to fit your style, your workflow and your goals

From interface upgrades to cloud-based settings, Solid Edge 2026 gives you more control over your design environment. Configure your Parts Library to match your workflow, toggle to Dark Theme for visual comfort and streamline your modeling with redesigned command bars that reduce clicks and clutter. Undo/redo support for visibility commands adds flexibility when working with large assemblies and cloud-saved settings ensure a consistent experience – no matter where or how you work.

Unlock what's next with the freedom to tap into advanced tools as you need them

Value-based licensing removes the barriers to trying new tools and scaling your capabilities. Explore powerful add-on products like simulation, generative design, piping, electrical routing and more -- without a long-term commitment. New options this year expand what's possible, with support for everything from advanced inspection to CFD analysis. Whether you're solving a one-time challenge or expanding your team's skillset, token-based access gives you the freedom to work smarter, budget better and grow at your own pace.

Extend your design power – anytime, anywhere, on any device

NX X Essentials, part of the Designcenter suite, extends the power of Solid Edge, giving you access to CAD, CAM and CAE tools in a browser-based environment – no installation required. Quickly design, iterate and validate ideas with lightweight modeling, built-in simulation and manufacturing capabilities. Share live design data across departments, involve non-CAD users with secure access and markup tools and speed up reviews with built-in AR support. And with shared Parasolid compatibility, NX X Essentials and Solid Edge work seamlessly together for smooth, end-to-end workflows.

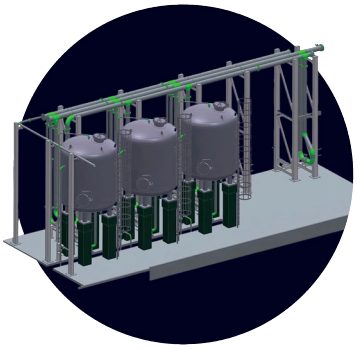

Work confidently with precise data you can trust

Solid Edge 2026 makes it easier to reuse, share and migrate design data – no matter where it comes from or where it's going. Import architectural models from Autodesk Revit, export only the geometry you need to protect intellectual property and streamline steel fabrication with direct DSTV export. For teams transitioning from other CAD systems, new integration with Elysium CADFeature ensures high-fidelity data migration with built-in quality checks. Whether you're collaborating across disciplines or moving decades of legacy data, Solid Edge gives you the tools to stay connected, accurate and in control.

Extended value

The Designcenter Solid Edge portfolio, part of the Siemens Xcelerator portfolio, is an integrated set of powerful, comprehensive, and accessible tools that advance all aspects of the product development process. Solid Edge addresses today's complex challenges with automated digital solutions that cultivate creativity and collaboration.

By harnessing the latest innovative technologies in mechanical and electrical design, simulation, manufacturing, publications, data management and cloud-based collaboration, Solid Edge dramatically shortens time-to-market, provides greater production flexibility, and significantly reduces costs with its collaborative and scalable solutions. For more information, visit siemens.com/Designcenter-Solid-Edge-2026.

Minimum system configuration

- Windows 10 Enterprise or Professional (64-bit only) version 1809 or later
- Java 8 and above, 64-bit
- 16 GB RAM
- 65K colors
- Screen resolution: 1920 x 1080
- 8.5 GB of disk space required for installation

Siemens Digital Industries Software

siemens.com/software

Americas
1 800 498 5351

Europe
00 800 70002222

Asia-Pacific
001 800 03061910

For additional numbers, click here.

© 2025 Siemens. A list of relevant Siemens trademarks can be found here. Other trademarks belong to their respective owners.

86860-D1 10/25 H